ACCORD LIGHTING

Specifier: _____ Date: _____

Project name: _____

Project location: _____

1216LED (LED)

Name:	KS Accord Pendant 1216 LED
Collection:	Organic
Application:	Pendant
Construction:	Natural Wood Venner, MDF and Acrylic

Specifications

Light Source:	Integrated LED Module
Driver Location	Dimmer Dependent
Color Temperature:	3000K, 3500K and 4000K
Dimming Option:	0-10V OR ELV/TRIAC
CRI:	90
Delivered Lumens:	3850 lm
Total Power:	56 W
Input Voltage:	120V - 277V
Input Frequency:	60 Hz
Canopy Dimension	N/A
Height Adjustment Limit:	10'
Weight:	N/A

Fixture Image

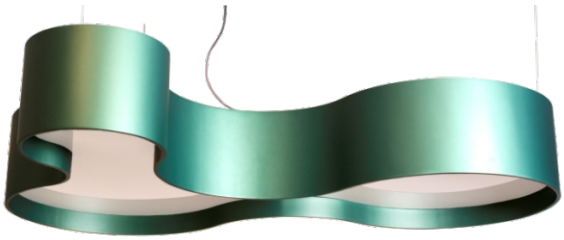

Technical Drawing

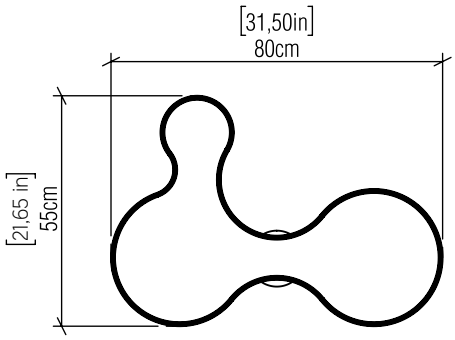

Photometric Graph

Coming Soon!

Standards

c UL us
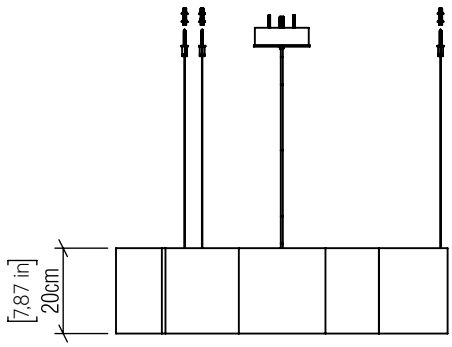
DAMP LOCATION